ANCHORS

THIS DOCUMENT IS PROTECTED BY COPYRIGHT. ALL RIGHTS ARE RESERVED. NO PART OF THIS DOCUMENT MAY BE PHOTOCOPIED, REPRODUCED, OR TRANSLATED TO ANOTHER LANGUAGE WITHOUT THE WRITTEN CONSENT OF ARROW INDUSTRIAL SUPPLY, INC. THE INFORMATION CONTAINED IN THIS DOCUMENT IS SUBJECT TO CHANGE WITHOUT NOTICE. COPYRIGHT 1993.

SLEEVE ANCHORS

HEX HEAD

SIZE	PART NUMBER	BX
5/16 x 1½	0015000430	100
5/16 x 2½	0015000440	100
3/8 x 5/8	0015000470	100
3/8 x 4	0015000480	100
1/2 x 2¼	0015000490	100
1/2 x 3	0015000500	100
1/2 x 4	0015000510	100
1/2 x 4 3/8	0015000520	25
1/2 x 6	0015000530	25
5/8 x 2¼	0015000540	25
5/8 x 3	0015000550	25
5/8 x 4¼	0015000560	25
5/8 x 4 5/8	0015000570	25
5/8 x 6	0015000580	25
3/4 x 2½	0015000590	25
3/4 x 4¼	0015000600	25
3/4 x 6¼	0015000610	25

PLASTIC ANCHORS

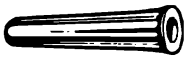

SIZE	COLOR	PART NUMBER	BX
6-8	BLUE	0015001400	100
10-12	BLUE	0015001410	100
14-16	BLUE	0015001420	100

NAIL ANCHORS

MUSHROOM HEAD

SIZE	PART NUMBER	BX
3/4 x 7/8	0005030000	100
1/4 x 3/4	0005030001	100
1/4 x 1"	0005030002	100
1/4 x 1 1/4	0005030003	100
1/4 x 1 1/2	0005030004	100
1/4 x 2"	0005030005	100

HOLLOW WALL DRIVE ANCHORS

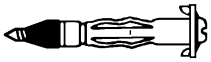

SIZE X LENGTH	PART NUMBER	BX
1/8 x X-SHORT	0015000800	100
1/8 x SHORT	0015000810	100
1/8 x SHORT	0015000820	100
1/8 x LONG	0015000830	100

HOLLOW WALL ANCHORS

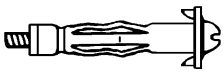

SIZE X LENGTH	PART NUMBER	BX
1/8 x X-SHORT	0015000620	100
1/8 x SHORT	0015000630	100
1/8 x SHORT	0015000640	100
1/8 x LONG	0015000650	100
1/8 x LONG	0015000660	100
1/8 x SHRT/LNG	0015000670	100
1/8 x X-LONG	0015000680	100
3/16 x SHORT	0015000690	50
3/16 x LONG	0015000700	50
3/16 x X-LONG	0015000710	50
1/4 x SHORT	0015000720	50
1/4 x LONG	0015000730	50
1/4 x X-LONG	0015000740	50

HI-THREAD DRY-WALL #10 SCREWS

LTH	PART NUMBER	BX
1"	0005010779	100
1-1/4	0005010778	100
1-1/2	0005010777	100
1-5/8	0005010776	100
1-3/4	0005010775	100
2"	0005010774	100
2-1/4	0005010773	100
2-1/2	0005010772	100
3"	0005010771	100
3-1/2	0005010770	100

DROP-IN ANCHORS

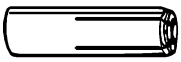

SIZE	PART NUMBER	BX
1/4 x 1 1/8	0015001570	100
3/8 x 1 9/16	0015001580	100
1/2 x 2	0015001590	50
5/8 x 2½	0015001600	25
3/4 x 3 1/8	0015001610	25

WEDGE ANCHORS

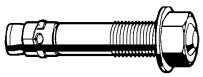

CARBON STEEL

SIZE	PART NUMBER	BX
1/4 x 1¾	0015000010	25
1/4 x 2¼	0015000020	25
1/4 x 3¼	0015000030	25
3/8 x 2¼	0015000040	25
3/8 x 2¾	0015000050	25
3/8 x 3	0015000060	25
3/8 x 3¾	0015000070	25
3/8 x 5	0015000080	25
3/8 x 6¼	0015000090	25
1/2 x 2¾	0015000100	25
1/2 x 3¾	0015000110	25
1/2 x 4¼	0015000120	25
1/2 x 5½	0015000130	25
1/2 x 7	0015000140	25
1/2 x 8½	0015000150	25
1/2 x 10¾	0015000160	25
1/2 x 12	0015000170	25
5/8 x 3½	0015000180	10
5/8 x 5	0015000200	10
5/8 x 6	0015000210	10
5/8 x 7	0015000220	10
5/8 x 8½	0015000230	10
5/8 x 10	0015000240	10
5/8 x 12	0015000250	10
3/4 x 4¼	0015000260	10
3/4 x 5½	0015000280	10
3/4 x 6¼	0015000290	10
3/4 x 7	0015000300	10
3/4 x 8½	0015000310	10
3/4 x 10	0015000320	10
3/4 x 12	0015000330	10
7/8 x 6	0015000340	10
7/8 x 8	0015000350	10
7/8 x 10	0015000360	10
1 x 6	0015000370	10
1 x 9	0015000380	10
1 x 12	0015000390	10
1 x 15	0015000400	10
1¼ x 9	0015000410	10
1¼ x 12	0015000420	10

MUNGO JET PLUG

PLASTIC

SIZE	PART NUMBER	BOX
#6 15/16	0015011973	100
#8 1-1/32	0015011975	100

MACHINE SCREW ANCHORS

(1 TOOL PER 100)

SIZE	PART NUMBER	BX
6-32	0015001905	100
8-32	0015001910	100
10-24	0015001915	100
1/4-20	0015001920	100
5/16-18	0015001925	100
3/8-16	0015001930	50
1/2-13	0015001935	50
5/8-11	0015001940	25
3/4-10	0015001945	25

PLASTIC TOGGLE

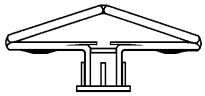

ANCHORS THICK DRY WALL

SIZE	PART NUMBER	BX
3/8	0015001430	100
1/2	0015001440	100
5/8	0015001450	100

PLASTIC PLUGS

SIZE	PART NUMBER	BX
1/8 x1	0015001460	100
3/16 x 1	0015001470	100
3/16 x 1½	0015001480	100
15/32 x 1	0015001490	100
15/32 x 1½	0015001500	100
1/4 x 1	0015001510	100
1/4 x 1¼	0015001520	100
1/4 x1½	0015001530	100

MUNGO JET PLUG

ZINC

SIZE	PART NUMBER	BOX
#8 1-1/32	0015011977	100

TOGGLE BOLT

ROUND HEAD

SLOTTED

SIZE	PART NUMBER	BX
1/8 x 3	0015001620	100
1/8 x 2	0015001625	100
1/8 x 4	0015001630	100
3/16 x 2	0015001635	100
3/16 x 3	0015001640	100
3/16 x 3½	0015001643	100
3/16 x 4	0015001645	100
3/16 x 5	0015001650	50
3/16 x 6	0015001655	50
1/4 x 2	0015001657	50
1/4 x 2½	0015001658	50
1/4 x 3	0015001660	50
1/4 x 3½	0015001663	50
1/4 x 4	0015001665	50
1/4 x 5	0015001670	50
1/4 x 6	0015001675	50
5/16 x 3	0015001680	25
5/16 x 3½	0015001683	25
5/16 x 4	0015001685	25
5/16 x 5	0015001690	25
5/16 x 6	0015001695	25
3/8 x 3	0015001700	25
3/8 x 3½	0015001703	25
3/8 x 4	0015001705	25
3/8 x 5	0015001710	25
3/8 x 6	0015001715	25
1/2 x 4	0015001720	10
1/2 x 5	0015001725	10
1/2 x 6	0015001730	10

MUNGO NYLON PLUG

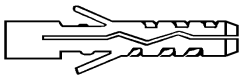

SIZE	PART NUMBER	BX
1/4 x 1¾	0015011900	100
5/32 x 3/4	0015011905	100
3/16 x 1	0015011910	100
1/4 x 1 3/16	0015011915	100
1/4 x 1 3/8	0015011920	100
5/16 x 1½	0015011925	100
3/8 x 2	0015011930	50
1/2 x 2 3/8	0015011935	25
9/16 x 2¾	0015011940	15
5/8 x 3 1/8	0015011945	10
3/4 x 3 9/16	0015011950	5

ANCHORS

THIS DOCUMENT IS PROTECTED BY COPYRIGHT. ALL RIGHTS ARE RESERVED. NO PART OF THIS DOCUMENT MAY BE PHOTOCOPIED, REPRODUCED, OR TRANSLATED TO ANOTHER LANGUAGE WITHOUT THE WRITTEN CONSENT OF ARROW INDUSTRIAL SUPPLY, INC. THE INFORMATION CONTAINED IN THIS DOCUMENT IS SUBJECT TO CHANGE WITHOUT NOTICE. COPYRIGHT 1993.

TOOLS

CONDRIVE TOOL # 1000

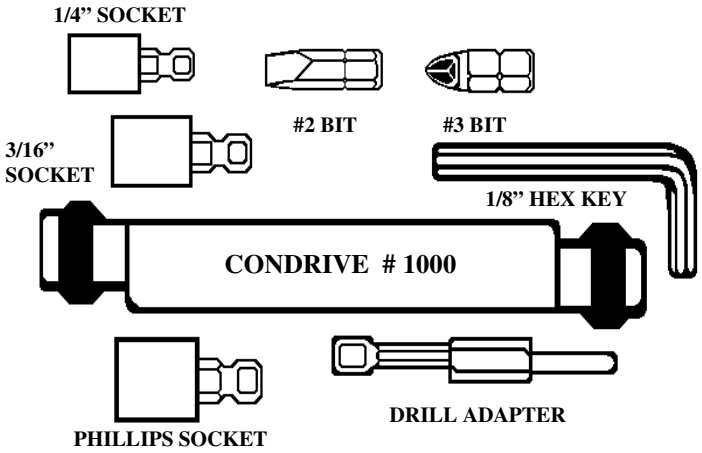

COMPLETE SET PART NUMBER 0015000900

CONDRIVE TOOL # 2000

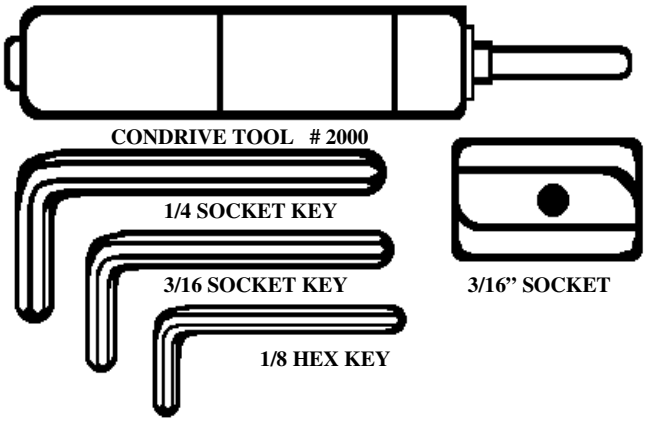

COMPLETE SET PART NUMBER 0015000900

TAPCON SCREWS

SLOTTED HEX HEAD

SIZE	PART NUMBER	BX
3/16 x 1¼	0015000920	100
3/16 x 1¾	0015000930	100
3/16 x 2¼	0015000940	100
3/16 x 2¾	0015000950	100
3/16 x 3¼	0015000960	100
3/16 x 3¾	0015000970	100
3/16 x 4	0015000980	100
1/4 x 1¼	0015000990	100
1/4 x 1¾	0015001000	100
1/4 x 2¼	0015001010	100
1/4 x 2¾	0015001020	100
1/4 x 3¼	0015001030	100
1/4 x 3¾	0015001040	100
1/4 x 4	0015001050	100

PHILLIPS FLAT HEAD

SIZE	PART NUMBER	BX
3/16 x 1¼	0015001060	100
3/16 x 1¾	0015001070	100
3/16 x 2¼	0015001080	100
3/16 x 2¾	0015001090	100
3/16 x 3¼	0015001100	100
3/16 x 3¾	0015001110	100
3/16 x 4	0015001120	100
1/4 x 1¼	0015001130	100
1/4 x 1¾	0015001140	100
1/4 x 2¼	0015001150	100
1/4 x 2¾	0015001160	100
1/4 x 3¼	0015001170	100
1/4 x 3¾	0015001180	100
1/4 x 4	0015001190	100